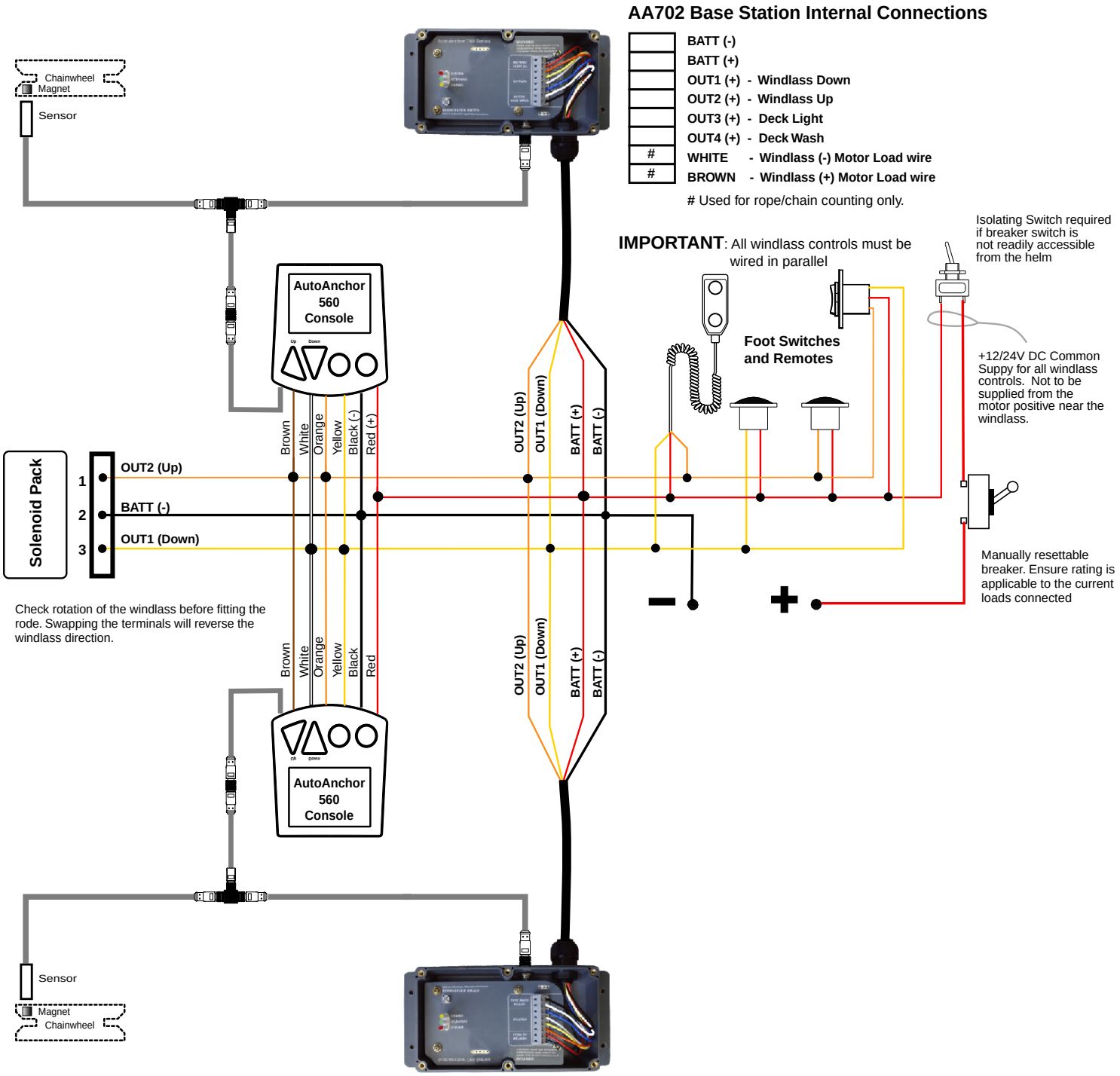All Chain Wiring for AA Products with Twin Chainwheel